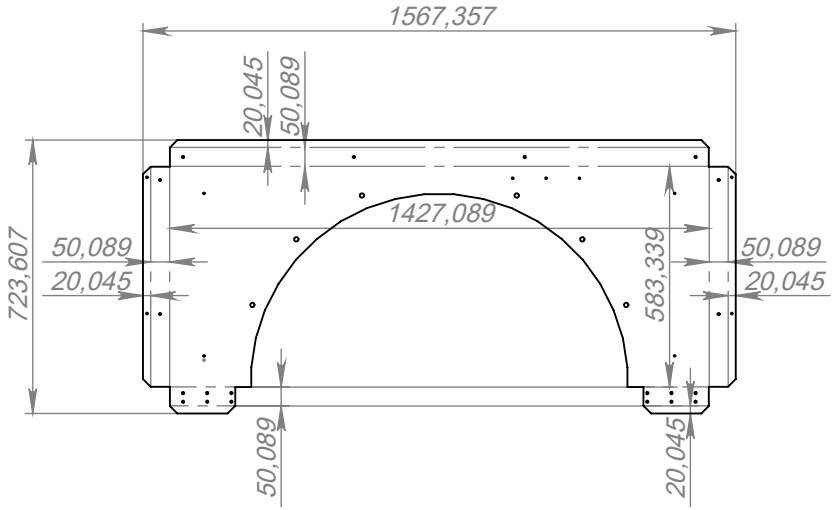
1567,357
20,045
50,089
723,607
1427,089
50,089
20,045
583,339
50,089
20,045
50,089
20,045

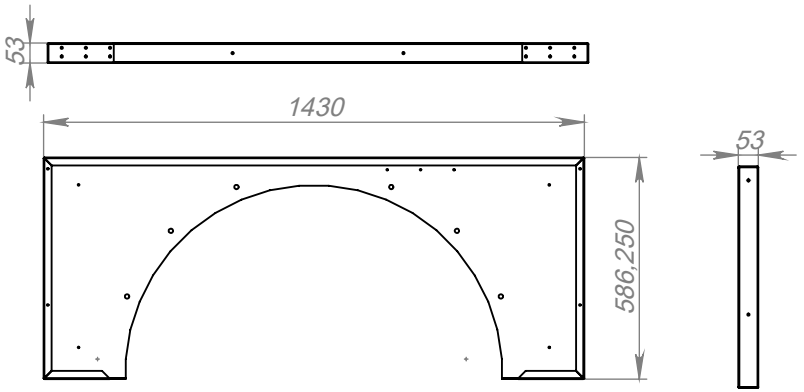
53
1430
53
586,250

